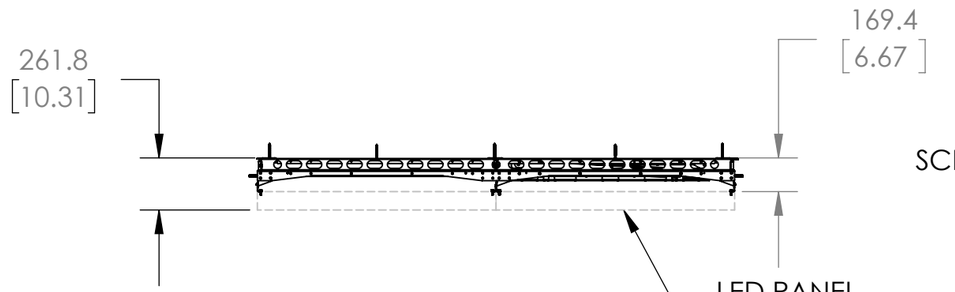

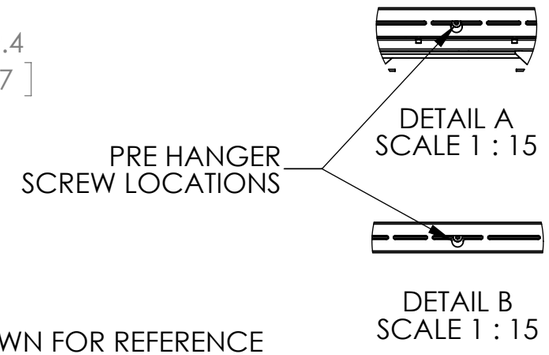

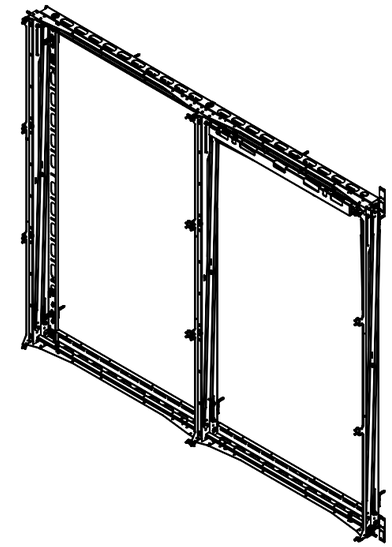

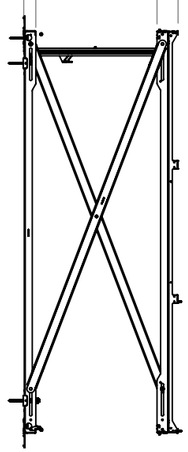

SIDE VIEW
EXTENDED

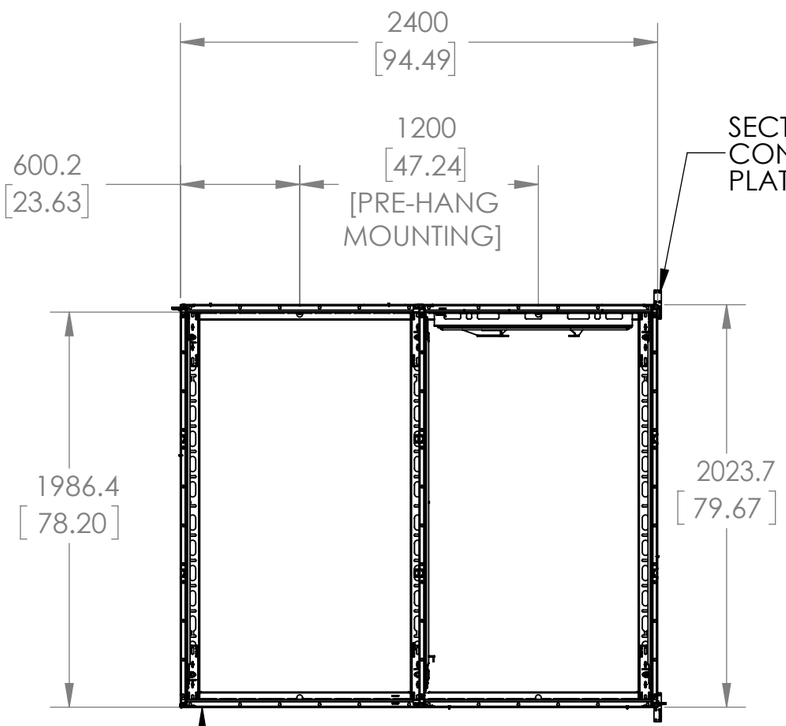

SIDE VIEW
COLLAPSED

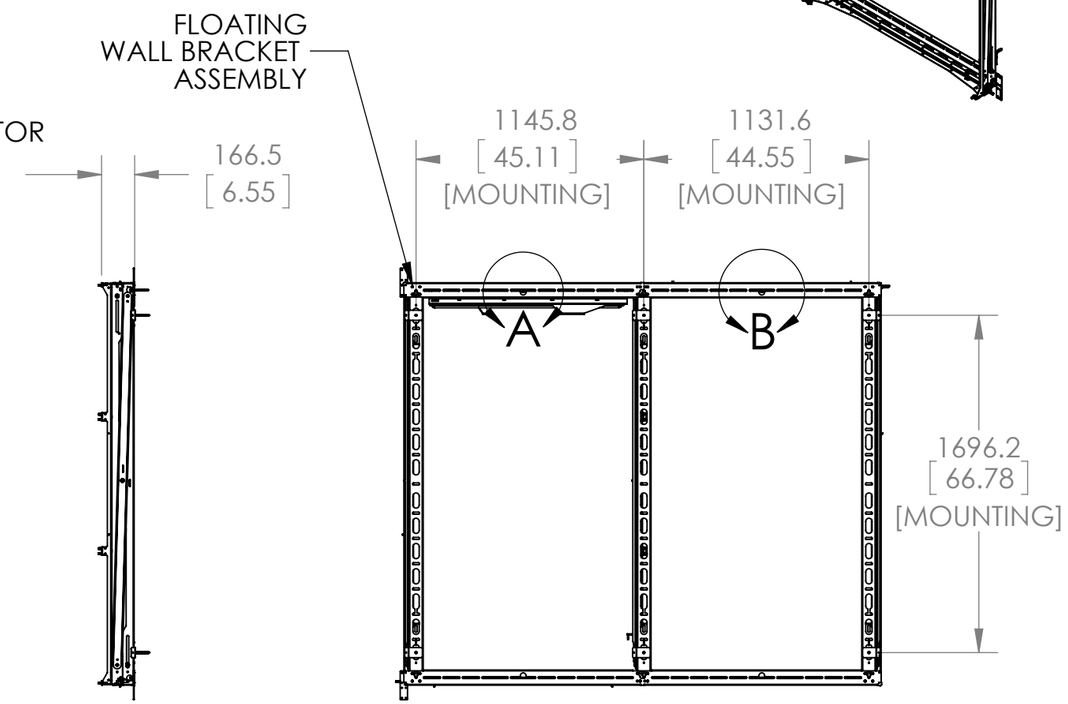

(FLOOR LINE)

TO DETERMINE THE POSITION OF THE PRE-HANGER SCREW
FIRST MEASURE THE DISTANCE REQUIRED FROM THE FLOOR
TO THE BOTTOM EDGE OF THE FRAME AND ADD 1986.4 mm [78.20"]
(FLOOR DIMENSION + 1986.4 mm = REQUIRED
HEIGHT OF VIDEO WALL)

DIMENSION ARE IN MM AND [INCH]

vogel's®

ITEM DESCRIPTION:
PLW 1004 2x3 manual pull out video wall mount

SIZE	DWG. NO.	
B	PLW 1004	
SCALE: 1:30		SHEET 1 OF 1