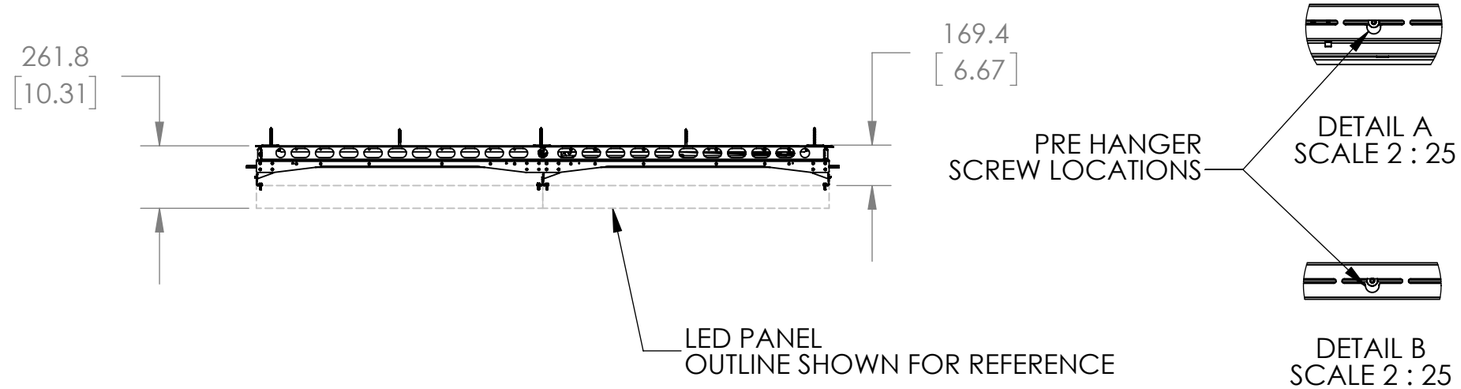

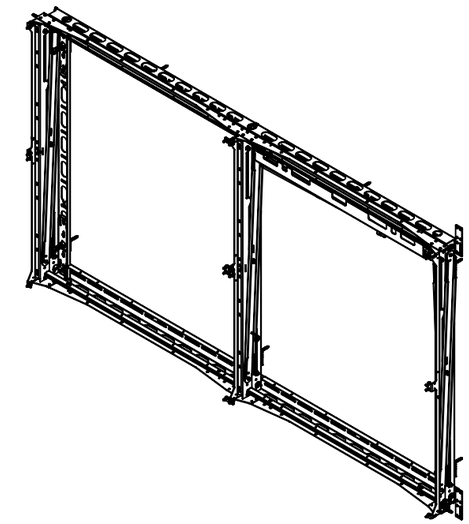

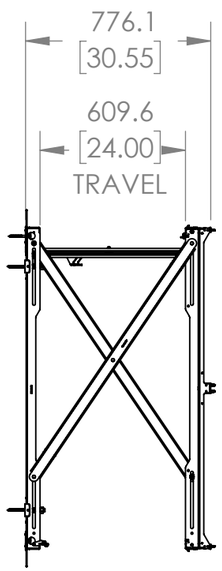

SIDE VIEW
EXTENDED

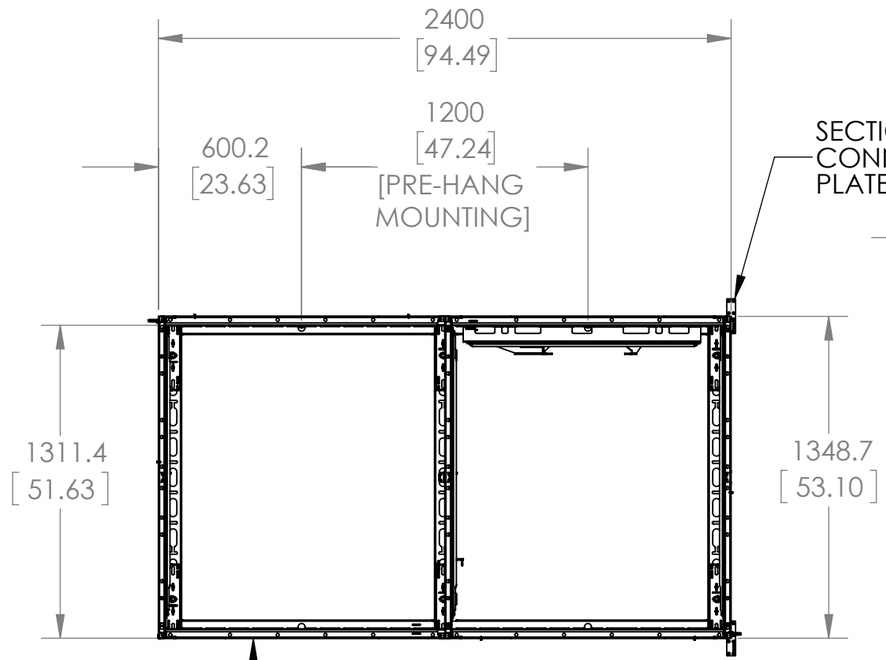

SIDE VIEW
COLLAPSED

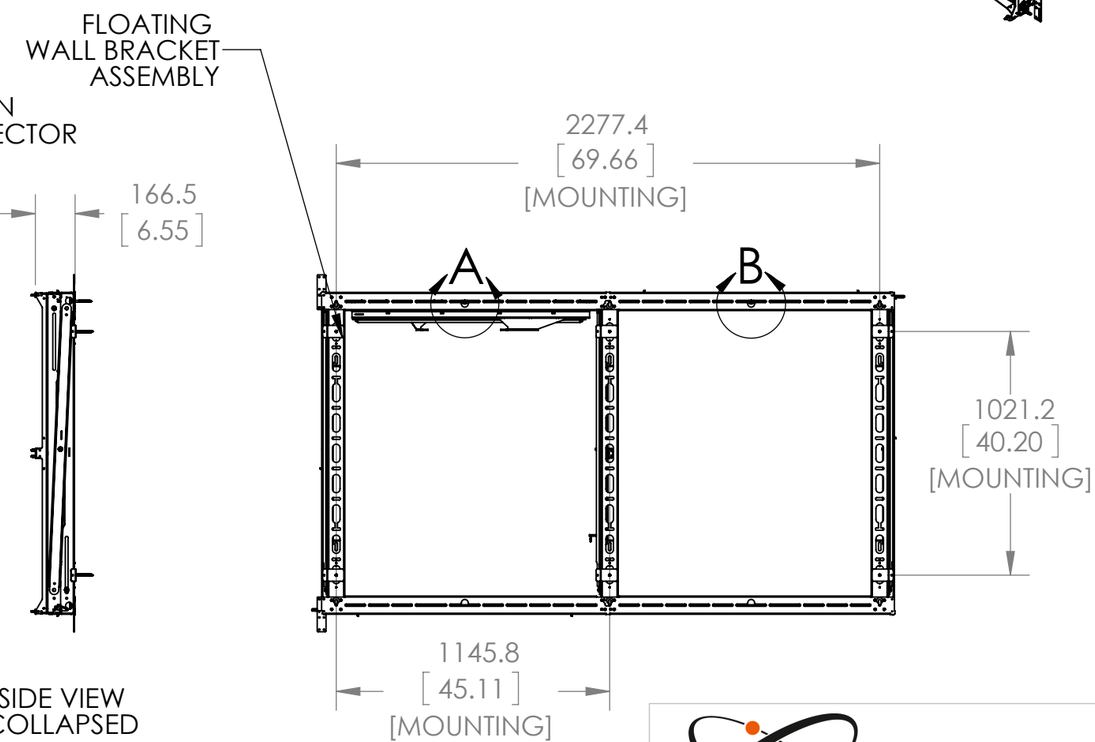

TO DETERMINE THE POSITION OF THE PRE-HANGER SCREW
FIRST MEASURE THE DISTANCE REQUIRED FROM THE FLOOR
TO THE BOTTOM EDGE OF THE FRAME AND ADD 1311.4 mm [51.63"]
(FLOOR DIMENSION + 1311.4 mm = REQUIRED
HEIGHT OF VIDEO WALL)

DIMENSION ARE IN MM AND [INCH]

vogel's®

ITEM DESCRIPTION:
PLW 1002 2X2 manual pull out video wall mount

SIZE	DWG. NO.	
B	PLW 1002	
SCALE: 1:25		SHEET 1 OF 1